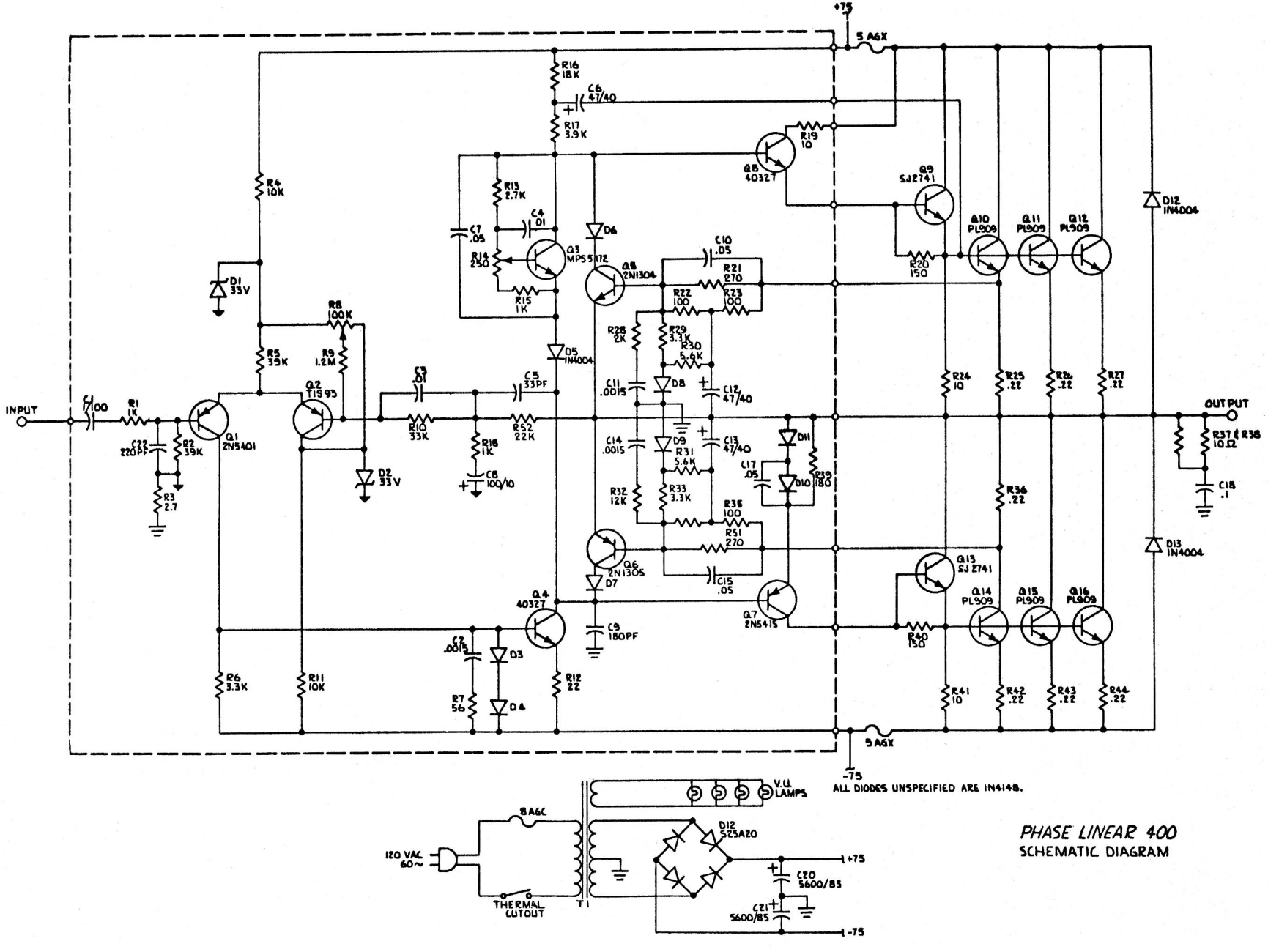

PHASE LINEAR 400
SCHEMATIC DIAGRAM