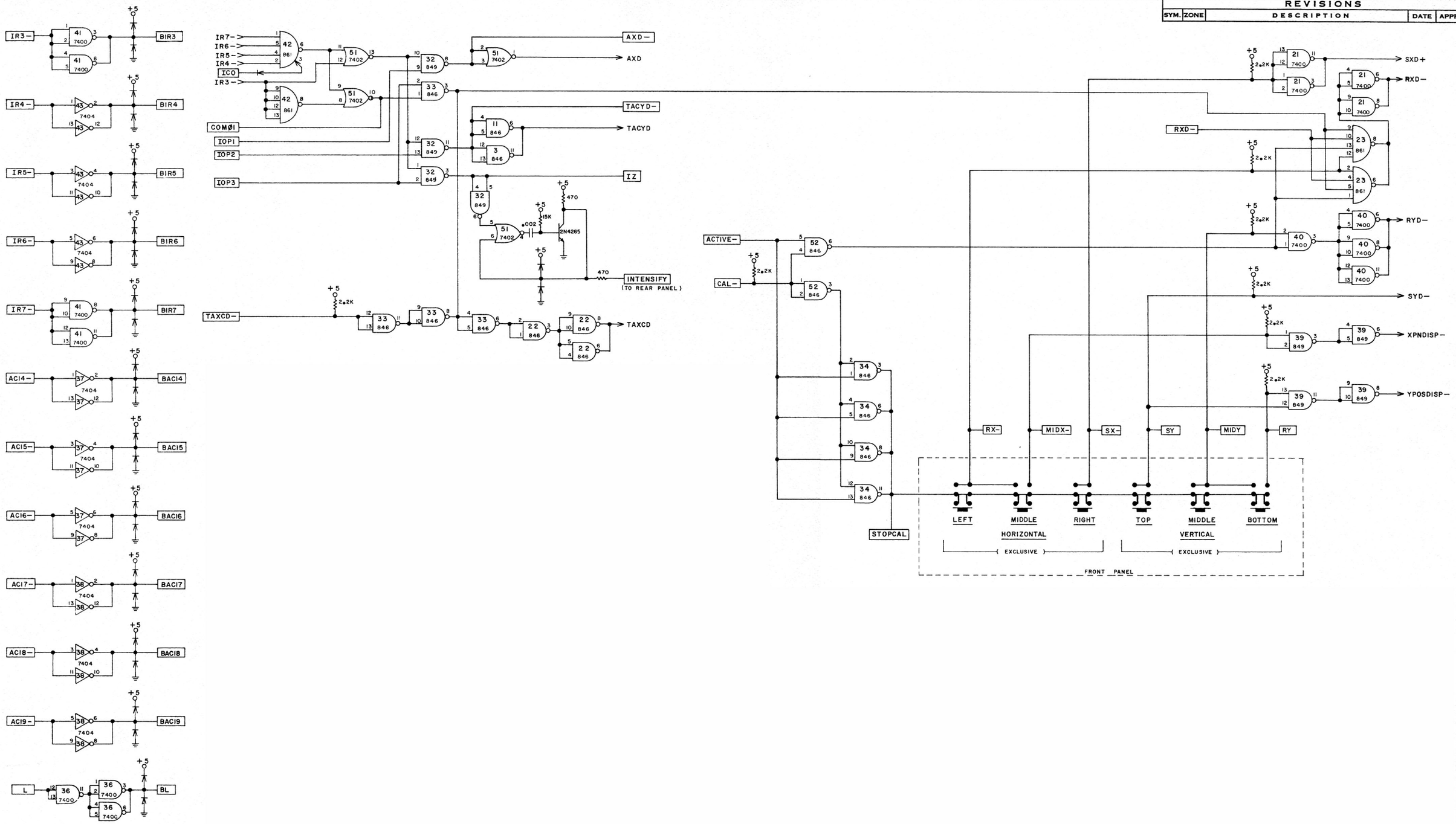

REVISIONS				
SYM.	ZONE	DESCRIPTION	DATE	APPROVED

REV.

DIST. KEY

UNLESS OTHERWISE SPECIFIED DIMENSIONS ARE IN INCHES AND TOLERANCES ARE
FRACTIONS ± DECIMALS ± ANGLES ±
√ INDICATES SURFACE ROUGHNESS PER MIL-STD-10

MATERIAL
SPEC.
FINISH
SPEC.

NEXT ASS'Y | USED ON
APPLICATION

REMOVE ALL BURRS
BREAK ALL SHARP CORNERS

		DATE
DRAWN	Gul	
CHECKED		
APPROVED		
APPROVED		

NICOLET INSTRUMENT CORPORATION
5225 Verona Road, Madison, Wisconsin 53711

TITLE
DISPLAY REGISTER CONTROL BOARD
1080

CODE IDENT. NO. | SIZE D | (BOARD 5)
SCALE | SHEET 2 of 2