REVISIONS				
SYM.	ZONE	DESCRIPTION	DATE	APPROVED

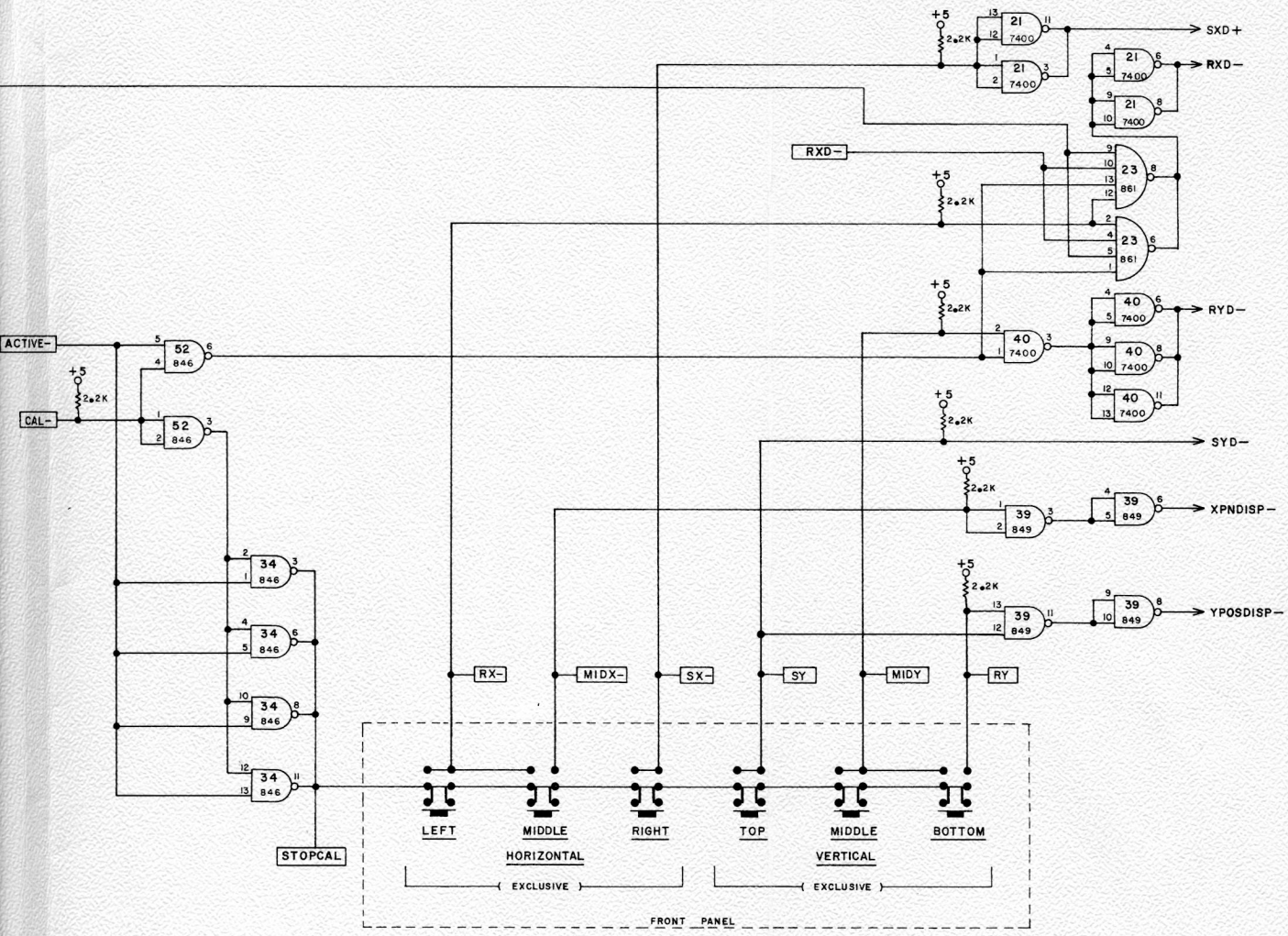

REV.

DIST. KEY

UNLESS OTHERWISE SPECIFIED DIMENSIONS ARE IN INCHES AND TOLERANCES ARE FRACTIONS ± DECIMALS ± ANGLES ± √ INDICATES SURFACE ROUGHNESS PER MIL-STD-10	REMOVE ALL BURRS BREAK ALL SHARP CORNERS	NICOLET INSTRUMENT CORPORATION 5225 Verona Road, Madison, Wisconsin 53711	
MATERIAL	DRAWN GW / DATE	TITLE DISPLAY REGISTER CONTROL BOARD 1080	
SPEC.	CHECKED		
FINISH	APPROVED	CODE IDENT. NO.	SIZE D / (BOARD 5)
SPEC.	APPROVED	SCALE	SHEET 2 of 2

NEXT ASS'Y	USED ON
APPLICATION	