REVISIONS				
SYM.	ZONE	DESCRIPTION	DATE	APPROVED

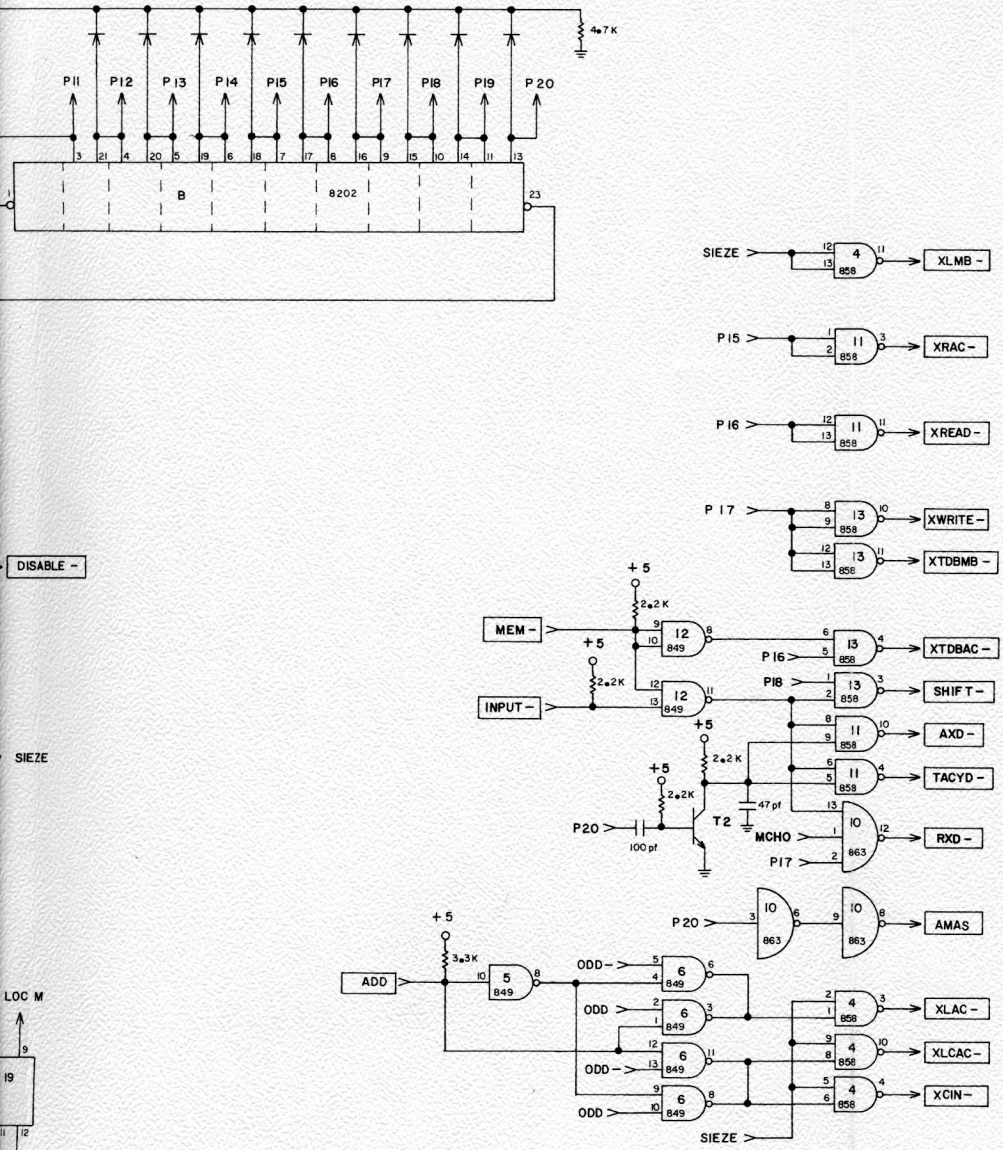

NOTE :

ALL TRANSISTORS ARE TYPE 2N4265.

ALL DIODES ARE TYPE FD-6666.

SIGNAL	CONNECTOR PIN	TO
GND	H - 1	
+ 5	H - 3	
- 5	H - 5	
	H - 7	
	H - 9	
	H - 11	
	H - 13	
	H - 15	
	H - 17	
	H - 19	
	H - 21	
XTDBAC -	H - 23	A - 29
ACTIVE -	H - 25	A - 78
AAUS -	H - 27	A - 70
DWELL	H - 29	A - 17
M -	H - 31	A - 19
XTDBMB -	H - 33	A - 49
	H - 35	
	H - 37	
	H - 39	
1 MHZ	H - 41	B - 15
	H - 43	
	H - 45	
	H - 47	
BIR 3	H - 49	A - 57
BIR 4	H - 51	A - 59
BIR 5	H - 53	A - 61
BIR 6	H - 55	A - 63
BIR 7	H - 57	A - 65
ICO	H - 59	A - 64
IOP 3	H - 61	A - 77
IOP 2	H - 63	A - 75
IOP 1	H - 65	A - 66
+ 15	H - 67	
- 15	H - 69	
	H - 71	
- 50	H - 73	
	H - 75	
	H - 77	
+ 50	H - 79	

GND	H - 2	
+ 5	H - 4	
- 5	H - 6	
DWEL COM -	H - 8	B - 14
MNC	H - 10	A - 44
MNO	H - 12	A - 42
AUSOF	H - 14	A - 76
STOP -	H - 16	A - 68
	H - 18	
DISABLE -	H - 20	A - 15
	H - 22	
SNR	H - 24	FPD - 20
CMAS -	H - 26	A - 3
SWP ABORT -	H - 28	B - 16
MASOF	H - 30	A - 5
RASOF	H - 32	A - 7
	H - 34	
ADD	H - 36	A - 46
XWRITE -	H - 38	A - 31
GND	H - 40	
SHIFT -	H - 42	A - 23
INPUT -	H - 44	A - 50
MEM -	H - 46	A - 48
XREAD -	H - 48	A - 27
AXD -	H - 50	A - 9
TACYD -	H - 52	A - 69

XRAC -	H - 54	A - 45
RXD -	H - 56	A - 79
AMAS	H - 58	A - 1
XLMB -	H - 60	A - 25
XLCAC -	H - 62	A - 41
XCIN -	H - 64	A - 37
XLAC -	H - 66	A - 39
	H - 68	
+ 15	H - 70	
- 15	H - 72	
	H - 74	
- 50	H - 76	
	H - 78	
+ 50	H - 80	

REV.

DIST. KEY

UNLESS OTHERWISE SPECIFIED DIMENSIONS ARE IN INCHES AND TOLERANCES ARE
FRACTIONS ± DECIMALS ± ANGLES ±
√ INDICATES SURFACE ROUGHNESS PER MIL-STD-10

MATERIAL

SPEC.

FINISH

SPEC.

REMOVE ALL BURRS
BREAK ALL SHARP CORNERS

		DATE
DRAWN	B.C.	
CHECKED		
APPROVED		
APPROVED		

NICOLET INSTRUMENT CORPORATION
5225 Verona Road, Madison, Wisconsin 53711

TITLE SD-82 ANALOG TO DIGITAL CONVERTER CONTROL LOGIC
BOARD LOCATION "H"

CODE IDENT. NO. | SIZE D | DWG. NO.

SCALE | SHEET

NEXT ASS'Y	USED ON
APPLICATION	