REVISIONS				
SYM.	ZONE	DESCRIPTION	DATE	APPROVED

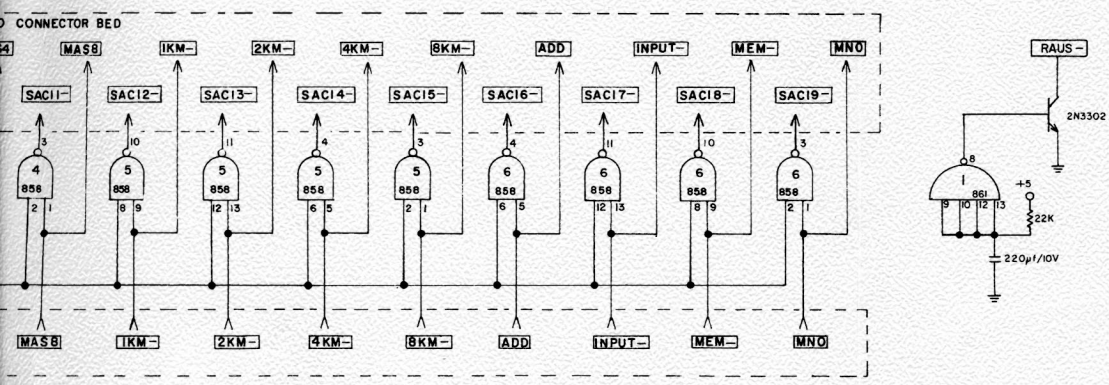

REV.

DIST. KEY

UNLESS OTHERWISE SPECIFIED DIMENSIONS ARE IN INCHES AND TOLERANCES ARE
FRACTIONS ± DECIMALS ± ANGLES ±
√ INDICATES SURFACE ROUGHNESS PER MIL-STD-10

MATERIAL

SPEC.

FINISH

SPEC.

REMOVE ALL BURRS
BREAK ALL SHARP CORNERS

DRAWN	MC	DATE 7-1-70
CHECKED		
APPROVED		
APPROVED		

NICOLET INSTRUMENT CORPORATION
5225 Verona Road, Madison, Wisconsin 53711

TITLE
FRONT PANEL CONNECTOR 1080

CODE IDENT. NO.	SIZE	
	D	(BOARD D2)
SCALE		SHEET 1 of 1

NEXT ASS'Y	USED ON
APPLICATION	