REVISIONS				
SYM.	ZONE	DESCRIPTION	DATE	APPROVED

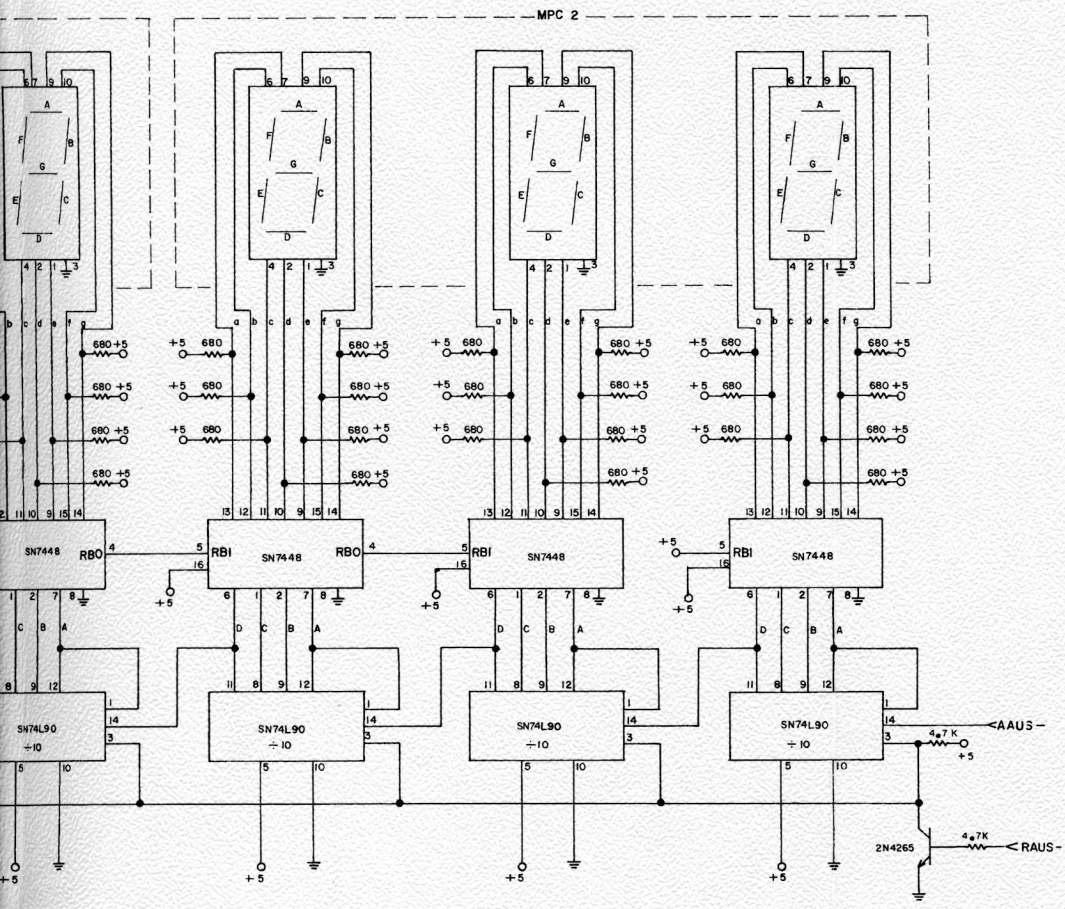

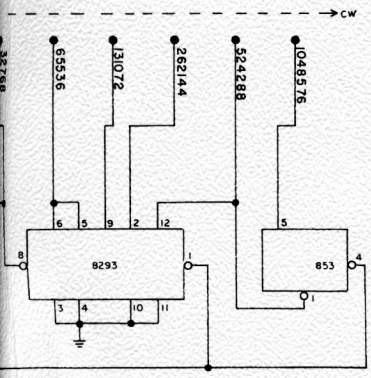

NEXT ASS'Y	USED ON
APPLICATION	

UNLESS OTHERWISE SPECIFIED DIMENSIONS ARE IN INCHES AND TOLERANCES ARE FRACTIONS ± DECIMALS ± ANGLES ±
√ INDICATES SURFACE ROUGHNESS PER MIL-STD-10

MATERIAL

SPEC.

FINISH

SPEC.

REMOVE ALL BURRS
BREAK ALL SHARP CORNERS

DRAWN	DATE
CHECKED	
APPROVED	
APPROVED	

NICOLET INSTRUMENT CORPORATION
5225 Verona Road, Madison, Wisconsin 53711

TITLE LOCATED ON FRONT PANEL OF 1080 SEVEN SEGMENT—SEVEN DIGIT DISPLAY COUNTER & DRIVER & AUTOSTOP SCALER

CODE IDENT. NO.	SIZE	DWG. NO.
	D	
SCALE		SHEET

REV.

DIST. KEY